jk machinery

Dry Destoner KVOR

Dry destoners are designed for removing of stones and other heavy admixtures from the main flow of grain and other crops and materials.

Sorted material is fed to inclined sieve, where fluidized bed results from vibrations and the passing air flow. Lighter material flows downward along the sieve. Heavier material gets upward due to vibrations of sieve.
Other function of this machine is dividing flow of material to light and heavy fractions, their proportion can be set continuously.

Individual mixtures may be separated with specific weight difference of 20 % and higher.
Aspiration air is suctioned by air fan. Exhausted air may be connected to central aspiration or into centrifugal dust cyclone, resp. air recycling system. The air recycling system serves to minimizing of quantity of outgoing air.
Machine is by standard fitted with light impurities aspiration from the fluidized bed surface of sorted material.

During process of grain destoning, this machine is capable to remove at the same time also impurities only little heavier than grain, e.g. rape seed, that goes to outlet together with stones.
The final product is usually cleaned above cleanness 99,9 % (of separable impurities and admixtures).

Dry Destoner KVOR

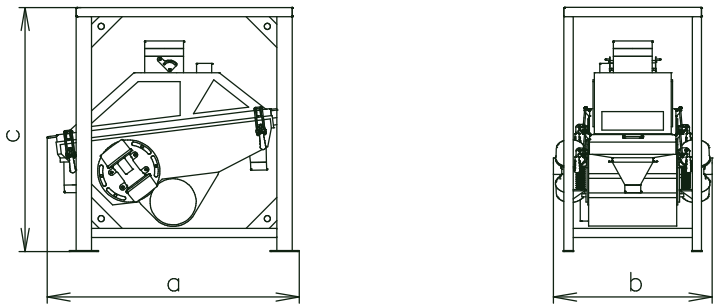

Dimensional Scheme

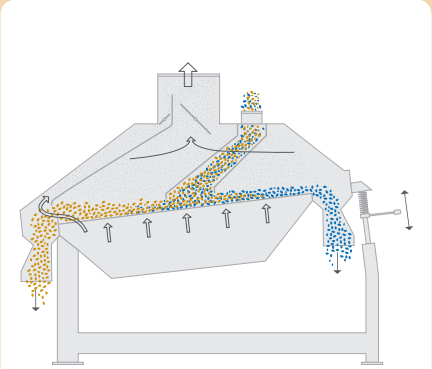

Functional Diagram

Type of Machine			KVOR 1200	KVOR 800	KVOR 500
Parameter	**Units**				
Main Dimensions*	Length (a)	m	1,80	1,70	1,60
	Width (b)	m	1,80	1,35	1,10
	Height (c)	m	1,70	1,60	1,60
Capacity**		t/h	12 - 16	8 - 12	2,0 – 3,0
Sieve Area		m²	1,5	1,0	0,5
Power Input	Destoner	kW	0,5	0,5	0,3
	Air Fan	kW	11,0	7,5	4
Weight	Destoner	kg	700	480	390

*Technical alteration reserved. * Dimensions and weights mentioned without air fan.*
*** Capacity data are valid for wheat bulk weight 780 kg/m3, impurities content up to 4%.*

Advantages:

- High efficiency
- Easy operation, easy installation and commissioning
- Easy adjustment of working parameters
- Minimal maintenance requirement
- Small dimensions and compact construction
- Low power consumption
- Dust-free operation

Applications:

- Industrial Mills – separation of stones, dividing grain to light and heavy fractions
- Malt plants – separation of stones from barley, malt
- Plants for oat processing
- Dehulling plants
- Other food-processing plants

JK Machinery, s.r.o., Pod Pekařkou 107/1, Praha 4, tel.: +420 222 362 620, fax: +420 234 073 323, e-mail: info@jk-machinery.com, www.jk-machinery.com

Rev. 11/04